WAND 1 — d=20cm; M1:50
WAND 2 — d=20cm; M1:50
WAND 3 — d=20cm; M1:50

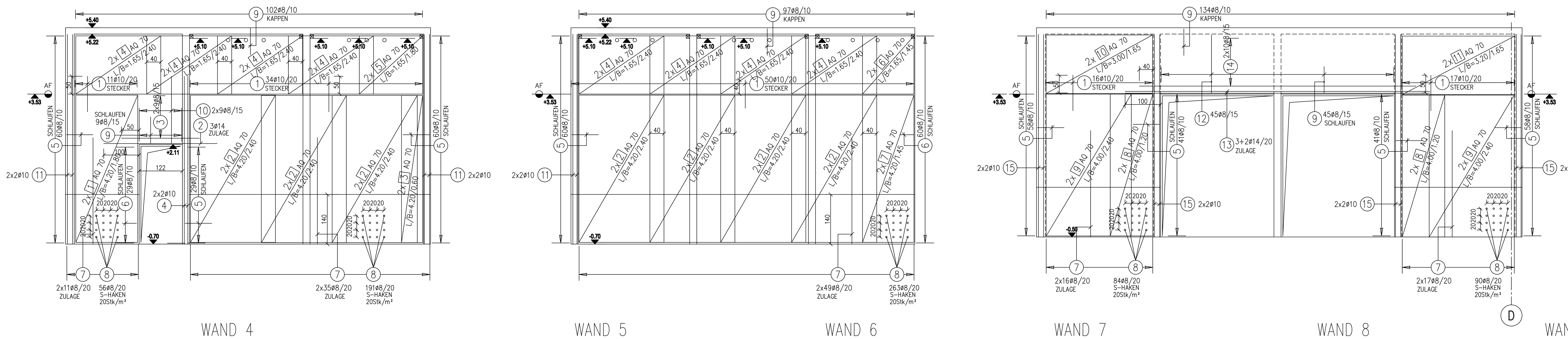

WAND 4 — d=20cm; M1:50
WAND 5 — d=20cm; M1:50
WAND 6 — d=20cm; M1:50
WAND 7 — d=20cm; M1:50
WAND 8 — d=20cm; M1:50
WAND 9 — d=20cm; M1:50

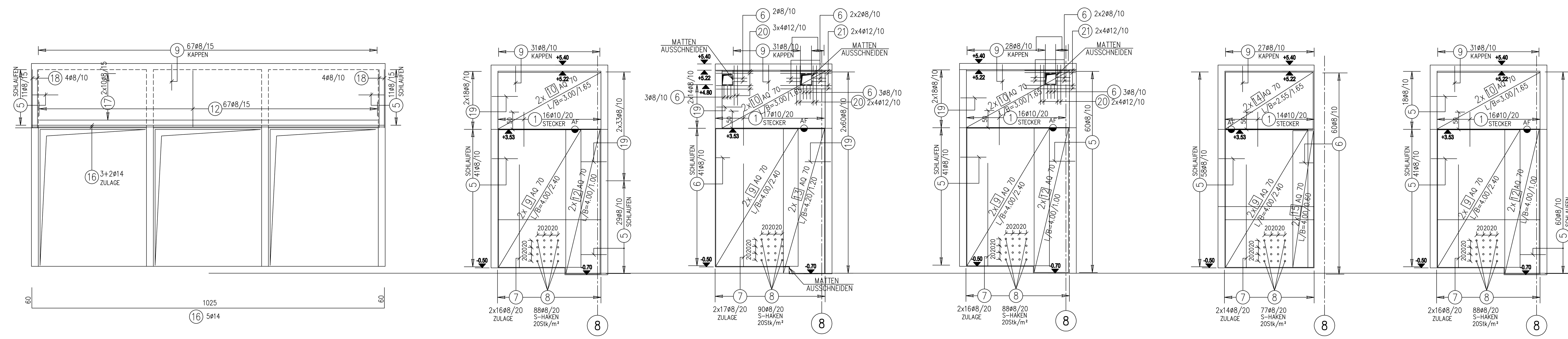

WAND 10 — d=20cm; M1:50
WAND 11 — d=20cm; M1:50
WAND 12 — d=20cm; M1:50

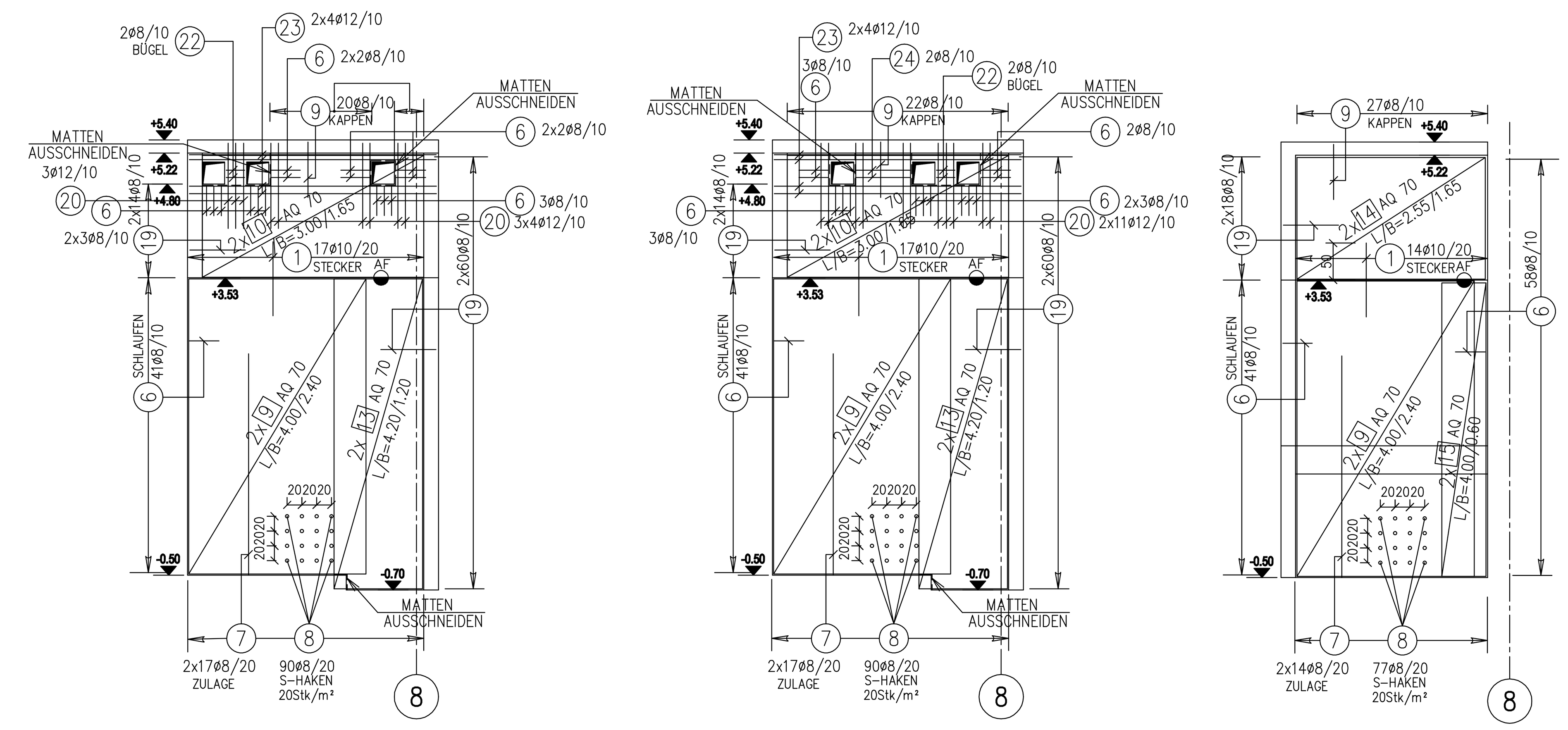

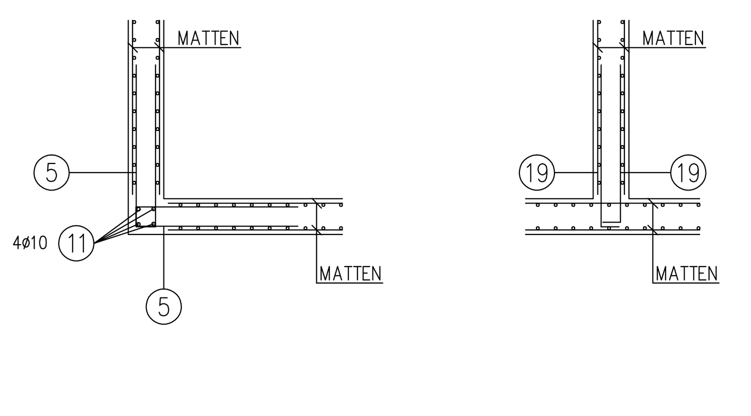

ÜBERSICHT
M 1:100

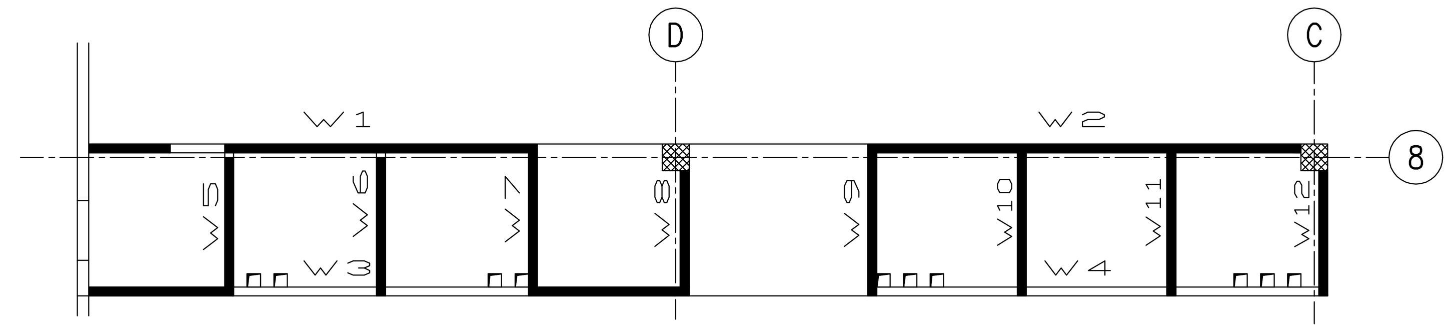

S-HAKEN
Für D=20cm.

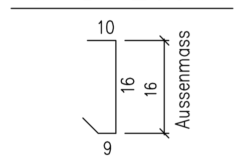

(8) 2150ø8, lg=0.40m

Pos	STÜCK	ø	LG. [m]	ø 8	ø 10	ø 12	ø 14	ø 16	ø 20	ø 26	ø 30	ø 36
				GESAMTLÄNGE DER DURCHMESSER								
1	255	10	1,00		255,00							
2	3	14	3,20				9,60					
3	18	8	2,20	39,60								
4	4	10	4,75		19,00							
5	777	8	1,65	1.282,05								
6	415	8	0,95	394,25								
7	510	8	3,40	1.734,00								
8	2150	8	0,35	752,50								
9	671	8	1,60	1.073,60								
10	18	8	1,90	34,20								
11	12	10	5,90		70,80							
12	112	8	1,65	184,80								
13	5	14	8,60				43,00					
14	20	8	7,80	156,00								
15	16	10	5,70		91,20							
16	5	14	11,45				57,25					
17	20	8	9,85	197,00								
18	8	10	1,65		13,20							
19	618	8	0,90	556,20								
20	65	12	1,15			74,75						
21	16	12	1,50			24,00						
22	4	8	1,00	4,00								
23	16	12	3,35			53,60						
24	2	8	2,00	4,00								
Summe m				6.412,20	449,2	152,35	109,85	0,0	0,00	0,00	0,00	0,00
kg/m				0,395	0,617	0,888	1,21	1,58	2,47	4,17	5,55	7,99
Summe kg				2.532,82	277,2	135,29	132,92	0,0	0,00	0,0	0,00	0,00
Σ kg 3.078,18												

Projekt : Isovolta Lebring
GZ-Nr.:
Pl.Nr.: 15
Blatt. Nr.: 1/2

BIEGELISTE

(1) 255ø10, lg=1.00m
(2) 3ø14, lg=3.20m
(3) 18ø8, lg=2.20m
(4) 4ø10, lg=4.75m
(5) 777ø8, lg=1.65m
(6) 415ø8, lg=0.95m
(7) 510ø8, lg=3.40m
(8) 2150ø8, lg=0.35m
(9) 671ø8, lg=1.60m
(10) 18ø8, lg=1.90m
(11) 12ø10, lg=5.90m
(12) 112ø8, lg=1.65m
(13) 5ø14, lg=8.60m
(14) 20ø8, lg=7.80m
(15) 16ø10, lg=5.70m
(16) 5ø14, lg=11.45m
(17) 20ø8, lg=9.85m
(18) 8ø10, lg=1.65m
(19) 618ø8, lg=0.90m
(20) 65ø12, lg=1.15m
(21) 16ø12, lg=1.50m
(22) 4ø8, lg=1.00m
(23) 16ø12, lg=3.35m
(24) 2ø8, lg=2.00m

Projekt : Isovolta Lebring
GZ-Nr.:
Pl.Nr.: 15
Blatt. Nr.: 2/2

BIEGELISTE

MATTEN:

1 AQ 70 – 4.20/1.80 – 2 Stk.
2 AQ 70 – 4.20/2.40 – 14 Stk.
3 AQ 70 – 4.20/0.60 – 2 Stk.
4 AQ 70 – 1.65/2.40 – 16 Stk.
5 AQ 70 – 1.65/1.80 – 2 Stk.
6 AQ 70 – 1.65/1.45 – 2 Stk.
7 AQ 70 – 4.20/1.45 – 2 Stk.
8 AQ 70 – 4.00/1.20 – 4 Stk.
9 AQ 70 – 4.00/2.40 – 20 Stk.
10 AQ 70 – 3.00/1.65 – 14 Stk.
11 AQ 70 – 3.20/1.65 – 2 Stk.
12 AQ 70 – 4.20/1.00 – 6 Stk.
13 AQ 70 – 4.20/1.20 – 6 Stk.
14 AQ 70 – 2.55/1.65 – 4 Stk.
15 AQ 70 – 4.00/0.60 – 4 Stk.

GEWICHT MATTEN:
AQ 70 – 620m² = 3 745kg